Contact: 0552822719
sales@aptools.sa
Al Shati, Dammam, Saudi Arabia

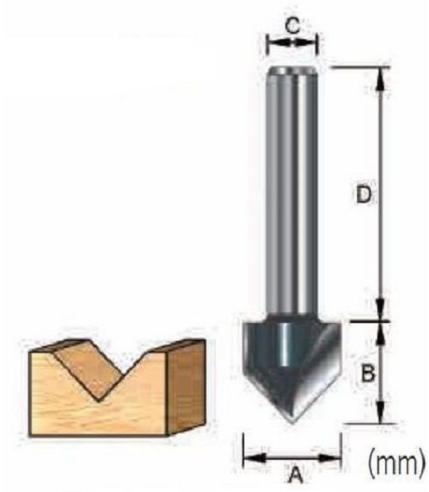

Makita

Accessories, Router Bits - "V" Groove Bit (12.7mm)

Brand: Makita
SKU: D-12376
Warranty: 0

Specifications

A	12.7
B	11.11
C	6
D	32
Angle	90°
Weight	0.1 KG
Weight	0.1 KG